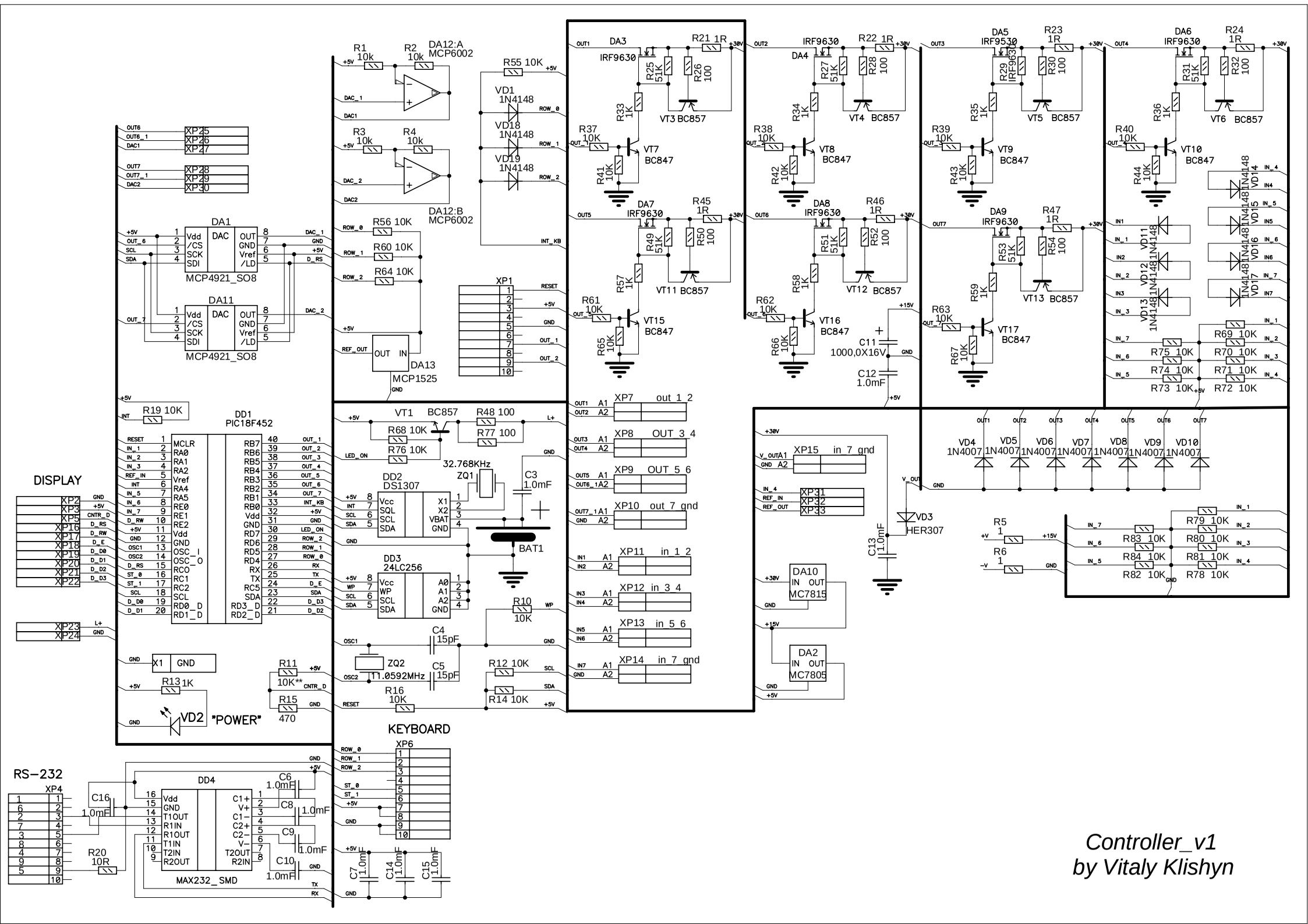
DISPLAY
RS-232
KEYBOARD
"POWER"
DD1 PIC18F452
DD2 DS1307
DD3 24LC256
DD4 MAX232_SMD
DA1 MCP4921_SO8
DA11 MCP4921_SO8
DA12:A MCP6002
DA12:B MCP6002
DA13 MCP1525
DA2 MC7805
DA10 MC7815
DA3 IRF9630
DA4 IRF9630
DA5 IRF9530
DA6 IRF9630
DA7 IRF9630
DA8 IRF9630
DA9 IRF9630
VT1 BC857
VT3 BC857
VT4 BC857
VT5 BC857
VT6 BC857
VT7 BC847
VT8 BC847
VT9 BC847
VT10 BC847
VT11 BC857
VT12 BC857
VT13 BC857
VT15 BC847
VT16 BC847
VT17 BC847
VD1 1N4148
VD18 1N4148
VD19 1N4148
VD2
VD3 HER307
VD4 1N4007
VD5 1N4007
VD6 1N4007
VD7 1N4007
VD8 1N4007
VD9 1N4007
VD10 1N4007
VD11 1N4148
VD12 1N4148
VD13 1N4148
VD14 1N4148
VD15 1N4148
VD16 1N4148
VD17 1N4148
ZQ1 32.768KHz
ZQ2 11.0592MHz
BAT1
C11 1000,0X16V
C12 1.0mF
C13 1.0mF
XP1
XP6
XP7 out_1_2
XP8 OUT_3_4
XP9 OUT_5_6
XP10 out_7_gnd
XP11 in_1_2
XP12 in_3_4
XP13 in_5_6
XP14 in_7_gnd
XP15 in_7_gnd
XP4
Controller_v1
by Vitaly Klishyn